Date: Wednesday, 1/9/2008 3:42:14 PM
User: Kim Johnston

Process Sheet

Customer	: CU-DAR001 Dart Helicopters Services	Drawing Name	: LUG
Job Number	: 36699		
Estimate Number	: 11696		
P.O. Number	:	Part Number	: D2713
This Issue	: 1/9/2008 S.O. No. :	Drawing Number	: D2713 REV A
Prsht Rev.	: NC	Project Number	: N/A
First Issue	: / / Type : MACHINED PARTS	Drawing Revision	: A
Previous Run	:	Material	:
Written By	:	Due Date	02/15/2008 Qty: 40 Um: Each
Checked & Approved By	: 08.01.09		
Comment	: Est:C 02.01.14 Added Tumble at step 5 NG/EC		

Additional Product

Job Number:

Seq. #:	Machine Or Operation:	Description :
1.0	D2761108	Extrusion
Comment:	Qty.: 0.3062 f(s)/Unit Total : 12.2472 f(s) Extrusion Batch B8323	J.L 08/03/10
2.0	BAND SAW	BAND SAW
Comment:	BAND SAW Cut D2761 extrusion to 3.100" +0.015/-0.000	J.L 08/03/10
3.0	HAAS1	HAAS CNC VERTICAL MACHINING #1
Comment:	HAAS CNC VERTICAL MACHINING #1 Machine per folio H2713 and drawing D2713 Deburr & Tumble.	J.L 08/03/14
4.0	QC2	INSPECT PARTS AS THEY COME OFF MACHINE
Comment:	INSPECT PARTS AS THEY COME OFF MACHINE	J.L 08/03/14
5.0	QC8	SECOND CHECK
Comment:	SECOND CHECK	SG 08.03.17 (40)
6.0	HAND FINISHING1	HAND FINISHING RESOURCE #1
Comment:	HAND FINISHING RESOURCE #1 Acid etch and Alodine as per QSI 005 4.1	40X 08/03/17

Form: rprocess

Dart Aerospace Ltd

W/O:		WORK ORDER CHANGES						
DATE	STEP	PROCEDURE CHANGE		By	Date	Qty	Approval Chief Eng / Prod Mgr	Approval QC Inspector

Part No: _____ PAR #: _____ Fault Category: _____ NCR: Yes (No) DQA: LD Date: 08/03/19

QA: N/C Closed: _____ Date: _____

NCR:		WORK ORDER NON-CONFORMANCE (NCR)							
DATE	STEP	Description of NC Section A	Corrective Action Section B				Verification Section C	Approval Chief Eng	Approval QC Inspector
			Initial Chief Eng	Action Description Chief Eng		Sign & Date			

NOTE: Date & initial all entries

Date: Wednesday, 1/9/2008 3:42:15 PM
User: Kim Johnston

Process Sheet

Customer: CU-DAR001 Dart Helicopters Services **Drawing Name:** LUG

Job Number: 36699 **Part Number:** D2713

Job Number:

Seq. #:	Machine Or Operation:	Description :
7.0	POWDER COATING	POWDER COATING
		M 107005 (40)
Comment:	POWDER COATING Powder Coat White Gloss (Ref: 4.3.5.1) as per QSI 005 4.3	BR 08-03-18
8.0	QC3	INSPECT POWDER COAT/CHEMICAL CONVERSION
		(40)
Comment:	INSPECT POWDER COAT/CHEMICAL CONVERSION	08/03/18
9.0	PACKAGING 1	PACKAGING RESOURCE #1
Comment:	PACKAGING RESOURCE #1 Identify and Stock Location: ST 480	AS 08/03/19 (40)
10.0	QC21	FINAL INSPECTION/W/O RELEASE
		(40)
Comment:	FINAL INSPECTION/W/O RELEASE	08/03/19

Job Completion 2008/3/19 (40)

Form: process

Dart Aerospace Ltd

W/O:		WORK ORDER CHANGES						
DATE	STEP	PROCEDURE CHANGE	By	Date	Qty	Approval Chief Eng / Prod Mgr	Approval QC Inspector

Part No: _____ **PAR #:** _____ **Fault Category:** _____ **NCR:** Yes No **DQA:** _____ **Date:** _____

QA: N/C Closed: _____ **Date:** _____

NCR:		WORK ORDER NON-CONFORMANCE (NCR)							
DATE	STEP	Description of NC Section A	Corrective Action Section B				Verification Section C	Approval Chief Eng	Approval QC Inspector
			Initial Chief Eng	Action Description Chief Eng		Sign & Date			

NOTE: Date & initial all entries

DESIGN	DRAWN BY	DART AEROSPACE LTD HAWKESBURY, ONTARIO, CANADA	
KE	KE		
CHECKED	APPROVED	DRAWING NO.	REV. A
		D2713	SHEET 1 OF 1
DATE		TITLE	SCALE
98.04.01		BRACKET	1:1

A	98.04.01	NEW ISSUE

QA COPY ISSUED

RELEASED 98/04/20 KE

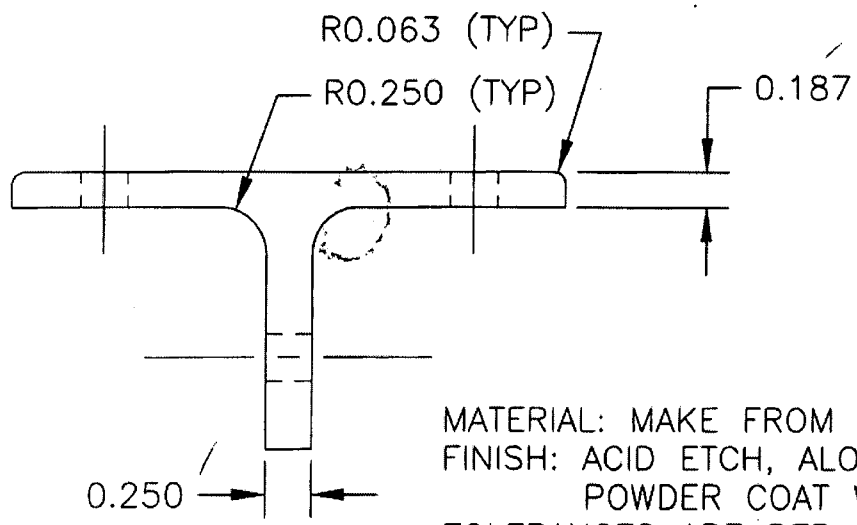

MATERIAL: MAKE FROM EXTRUSION D2761
FINISH: ACID ETCH, ALODINE PER DART QSI 005 4.1
POWDER COAT WHITE PER DART QSI 005 4.3
TOLERANCES ARE PER DART QSI 018 UNLESS OTHERWISE NOTED

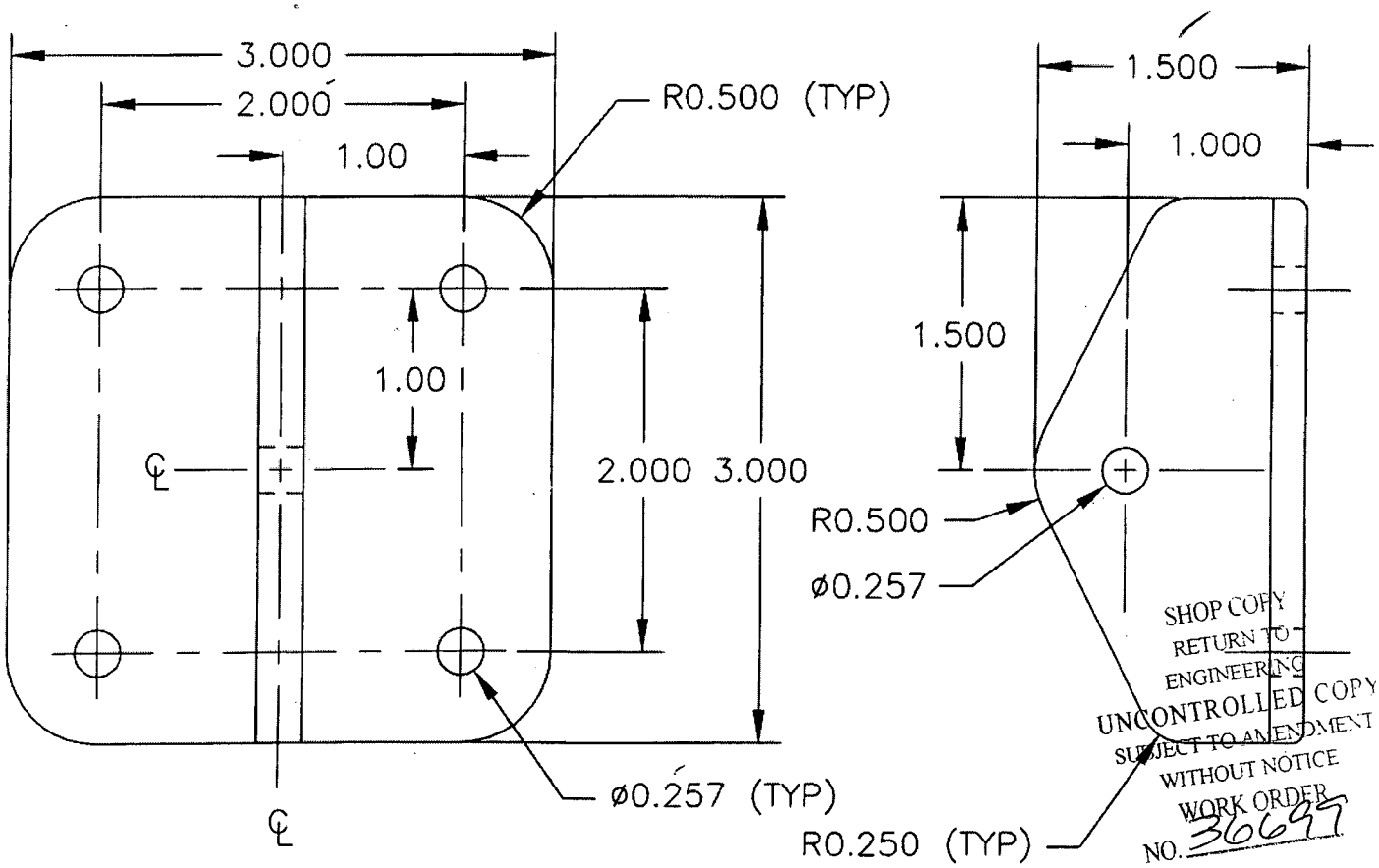

SHOP COPY
RETURN TO
ENGINEERING
UNCONTROLLED COPY
SUBJECT TO AMENDMENT
WITHOUT NOTICE
WORK ORDER
NO. 36699

DART AEROSPACE LTD	Work Order:	36697
Description: bracket	Part Number:	
Inspection Dwg: D2713 Rev: A		Page 1 of 1

FIRST ARTICLE INSPECTION CHECKLIST

☑ First Article ☐ Prototype

Drawing Dimension	Tolerance	Actual Dimension	Accept	Reject	Method of Inspection	Comments
.187	± .010	.185	✓			
.250	± .010	.244	✓			
3.000	± .010	2.996	✓			
2.000	± .010	1.998	✓			
1.00	± .030	.998	✓			
1.00	± .030	.997	✓			
2.000	± .010	2.000	✓			
3.000	± .010	2.996	✓			
Ø .257	+.006 −.001	.259	✓			
1.500	± .010	1.491	✓			
1.000	± .010	.996	✓			
1.500	± .010	1.496	✓			

Measured by:	J.L
Date:	08/03/14

Audited by:	
Date:	08-03-17

Prototype Approval:	
Date:	

Rev	Date	Change	Revised by	Approved
A		New Issue	KJ/RF	